PTO/PUMP ADAPTORS

UNI OUTPUT PTOs

PTO / UNI PUMP(ORIENTATION FLANGE)

MODEL - **114.000.00393**

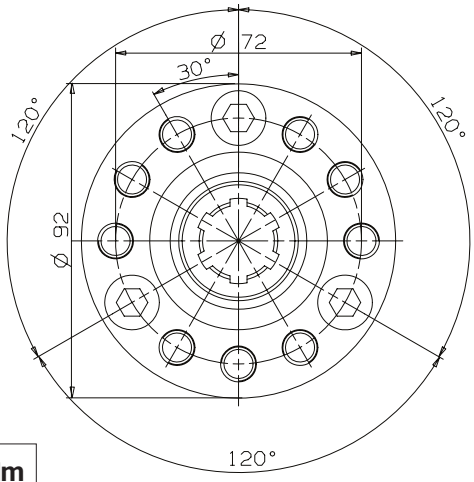

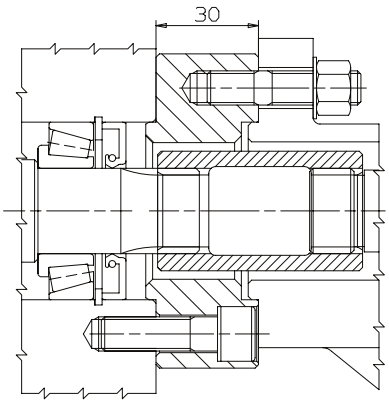

Maximum theoretical torque	**295 Nm**

Always grease shafts

UNI PTO (3 HOLES)/ISO (4-BOLT) PUMP

MODEL - **114.000.00615**

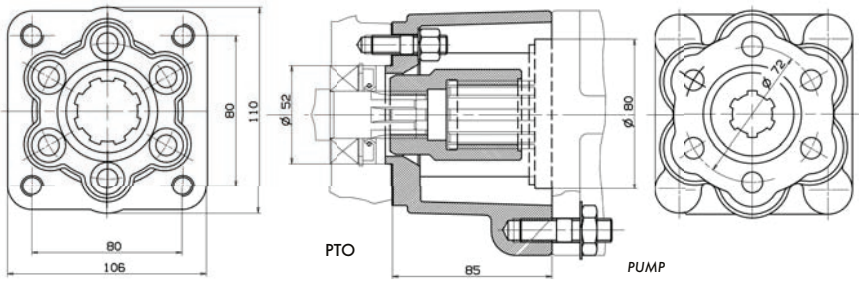

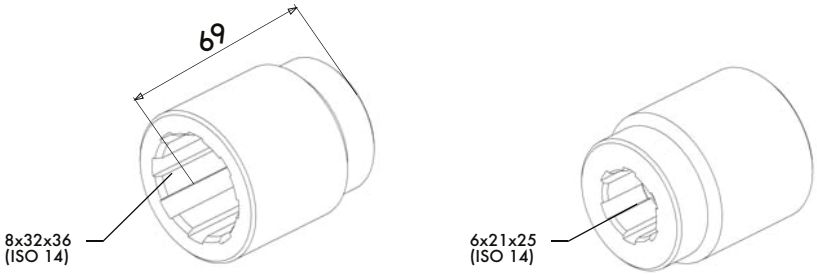

Maximum theoretical torque	**400 Nm**

Always grease shafts

PTO_PADAPT_21 Specifications subject to change without notice.

PHONE: 1300 300 375

transporteng.com.au info@transporteng.com.au

TRANSPORT ENGINEERING SOLUTIONS

A Sime Darby Motors Company

PTO/PUMP ADAPTORS

UNI OUTPUT PTOs

UNI PTO / DIN GROUP 2 PUMP

MODEL - **114.000.00599**

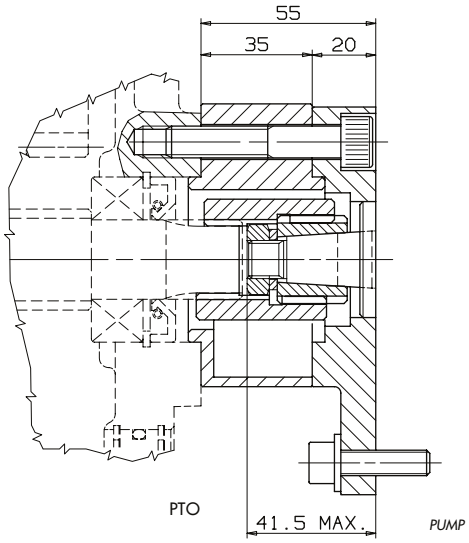

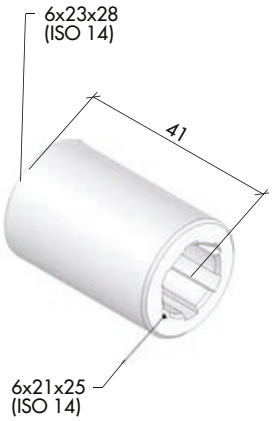

Maximum theoretical torque	**150 Nm**

Always grease shafts

UNI PTO / SAE-A PUMP

MODEL - **114.000.00142**

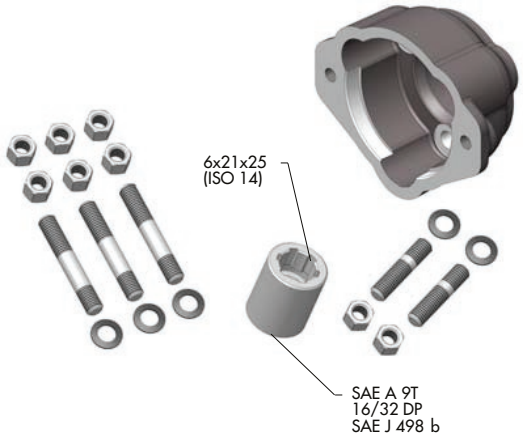

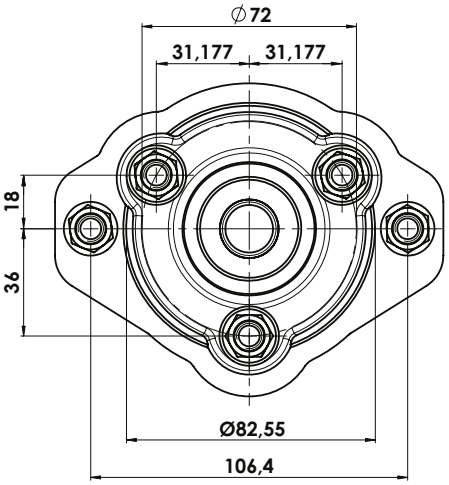

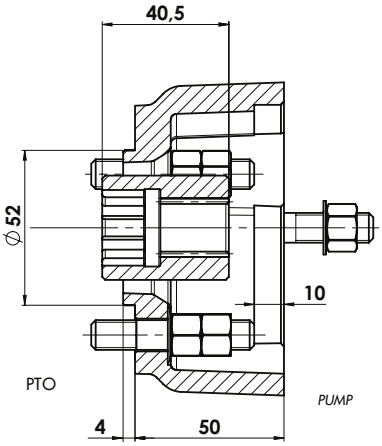

Maximum theoretical torque	**100 Nm**

Always grease shafts

PTO_PADAPT_21 Specifications subject to change without notice.

PHONE: 1300 300 375

transporteng.com.au info@transporteng.com.au

TRANSPORT ENGINEERING SOLUTIONS

A Sime Darby Motors Company

PTO/PUMP ADAPTORS

UNI OUTPUT PTOs

UNI PTO / SAE-B PUMP

MODEL - **114.000.00151**

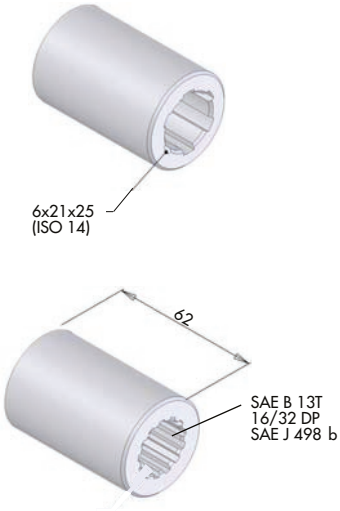

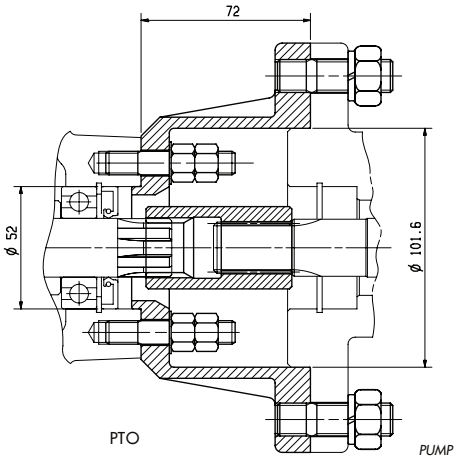

Maximum theoretical torque	**250 Nm**

Always grease shafts

UNI PTO / SAE-BB PUMP

MODEL - **114.000.11603**

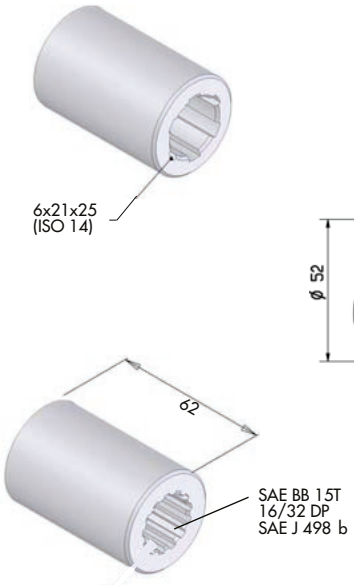

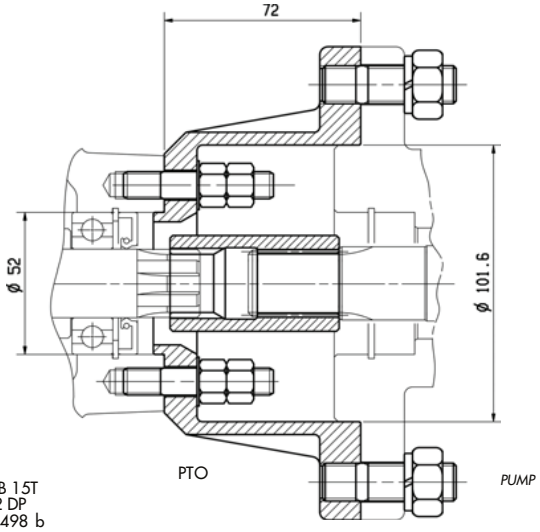

Maximum theoretical torque	**250 Nm**

Always grease shafts

PTO_PADAPT_21 Specifications subject to change without notice.

PHONE: 1300 300 375
transporteng.com.au info@transporteng.com.au

TRANSPORT ENGINEERING SOLUTIONS
A Sime Darby Motors Company

MELBOURNE • SYDNEY • BRISBANE • PERTH • ADELAIDE